FLOCKING FOR OBJECTS

Flocking Cabinet - mod. CTA/TO





The **Flocking Cabinet mod. CTA/TO** is designed to flock objects.

The machine is equipped with:

- Sealed cabinet to avoid flock dispersion
- Flocking hopper, equipped with brushes oscillating pneumatically over an electrostatic screen
- Handwheel to adjust hopper height
- Flock recovery system with collector, suction fan and filter bag
- Pedal control with timer to adjust operation time
- Electrostatic generator with adjustable tension from 0 to 50,000 Volt
- Control panel
- Optional robotized system for automatic flocking.

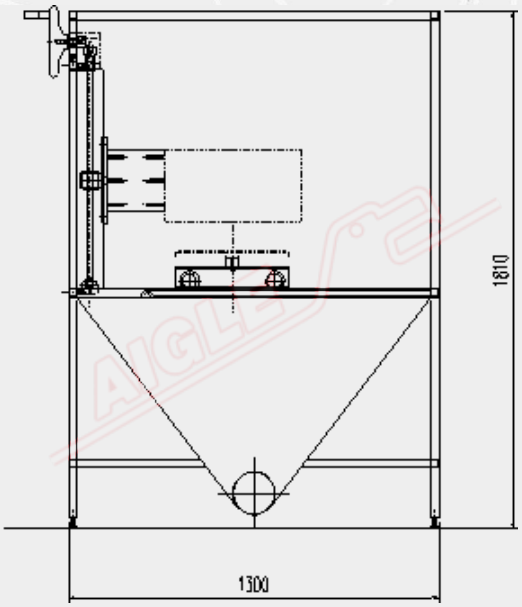

TECHNICAL DATA	
Power supply	400 V / 50 Hz / three-phase
Installed power	1 kW
Compressed air	7±1 Kg/cm²

Member of CISQ Federation
CERTIFIED MANAGEMENT SYSTEM
ISO 9001 - ISO 14001
GREEN LABEL
SUSTAINABLE MACHINERY CERTIFICATION

AIGLE Macchine srl • Via Donatello, 8 • 10071 Borgaro Torinese • ITALIA • Tel. +39 0112624382 • www.aigle.it • e-mail: info@aigle.it