FLOCKING FOR OBJECTS



Automatic 3D Object Flocking Cabinet - mod. CA-ESP



The **Automatic 3D Object Flocking Cabinet – mod. CA-ESP** can flock a high variety of objects with different shapes.

The process is totally automatic and consists of flocking and pre-cleaning phases in order to obtain the lowest flock excess. Receipts are available for recording the movements of the guns for flocking different objects.

Flocking guns move automatically along two axis, movements are controlled by PLC and settings can be adjusted through a user-friendly operator panel.

The flock container is located in the lower part of the machine. At its base, there is a motorized brush with variable speed. The brush feeds flock through a suitable filter.

Two electrostatic flocking guns mounted on a two-axis translator system, allows for sliding and swinging motions.



The pieces to be flocked are hanged to a rotating support. Rotation is achieved through a motor with total control of the piece motion. Translator system components are made to operate in dusty environments.

The front door is automatic (closes and opens before and after each cycle).

The cabinet is kept in slight depression by a fan with a filtering sleeve (mounted on the top of the cabin).

Member of CISQ Federation
RINA
CERTIFIED MANAGEMENT SYSTEM
ISO 9001 - ISO 14001
GREEN LABEL
SUSTAINABLE MACHINERY CERTIFICATION

AIGLE

AIGLE Macchine srl • Via Donatello, 8 • 10071 Borgaro Torinese • ITALIA • Tel. +39 0112624382 • www.aigle.it • e-mail: info@aigle.it

FLOCKING FOR OBJECTS



The cabinet is part of a range of machines and lines specifically designed for flocking objects for high productivity. Particular attention was given to the automotive industry, which requires high standards for:

- The quality of the flocked product
- The repeatability of the flocked product
- The reliability of the machines
- Easy maintenance
- The operator's safety

Of course, these machines are used also to flock three-dimensional objects in other areas, including:

- high-end packaging
- toys
- industrial components
- home furnishing
- clothing accessories
- different industrial components

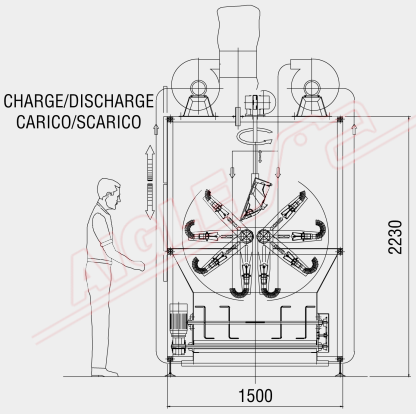

The flocking cabins are often manufactured following the specificity of the products to be treated, both for their shape and for their quantity.

They are therefore customized in:

- size
- type and quantity of flocking guns and their movement
- flock recycling and recovery systems
- pieces loading / unloading / handling system

TECHNICAL DATA

Power supply	400 V/50 Hz/three-phase
Installed power	3,5 kW
Compressed air	7±1 Kg/cm²

Member of CISQ Federation
CERTIFIED MANAGEMENT SYSTEM
ISO 9001 - ISO 14001

GREEN LABEL
SUSTAINABLE MACHINERY CERTIFICATION

AIGLE

AIGLE Macchine srl • Via Donatello, 8 • 10071 Borgaro Torinese • ITALIA • Tel. +39 0112624382 • www.aigle.it • e-mail: info@aigle.it